DVCP32BP30(N,P)-2
DVCP32BP32(N,P)-2
DVCP32BP70(N,P)-2
DVCP32BP72(N,P)-2
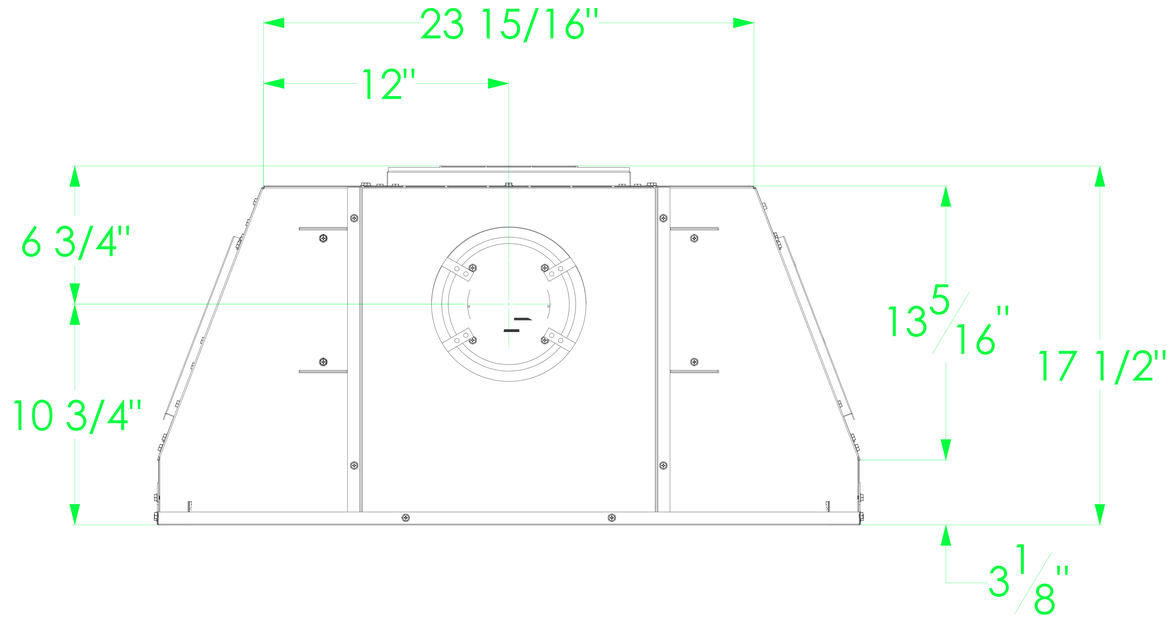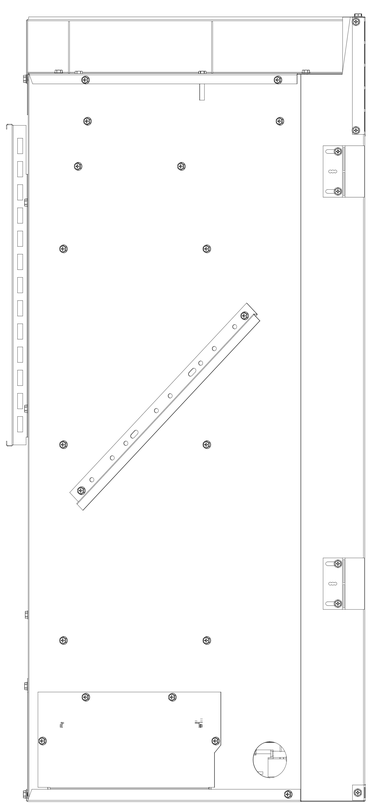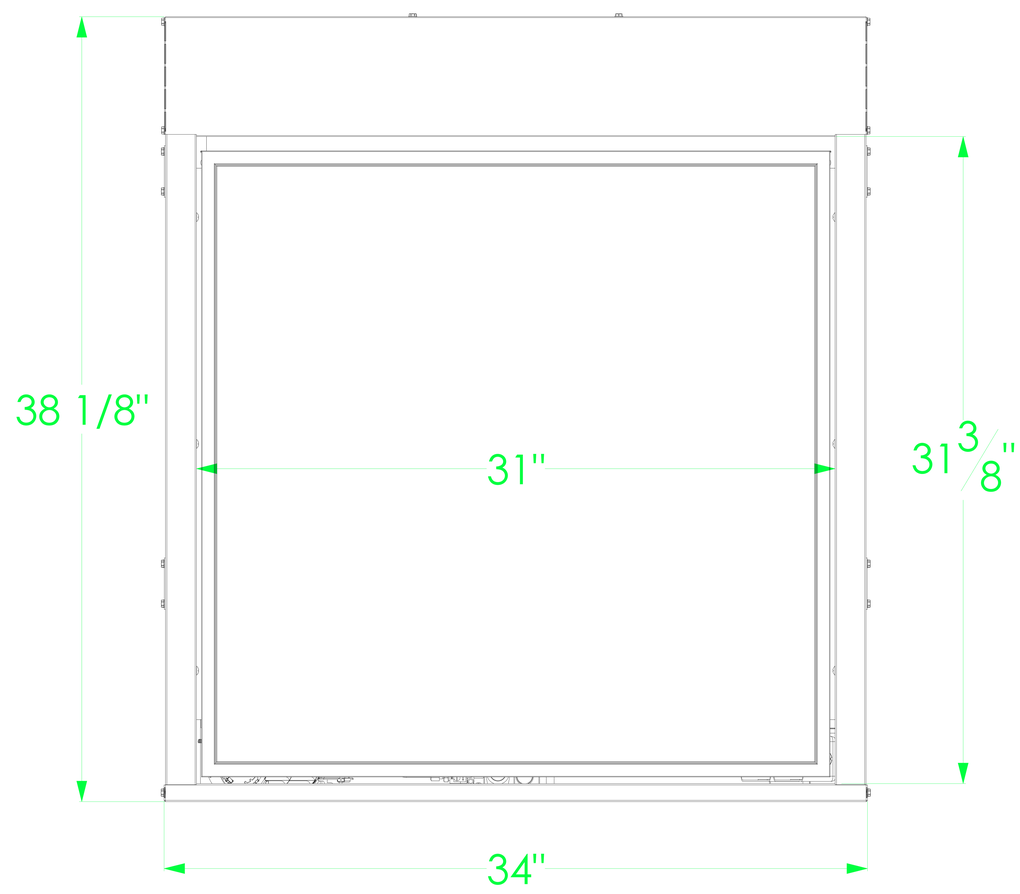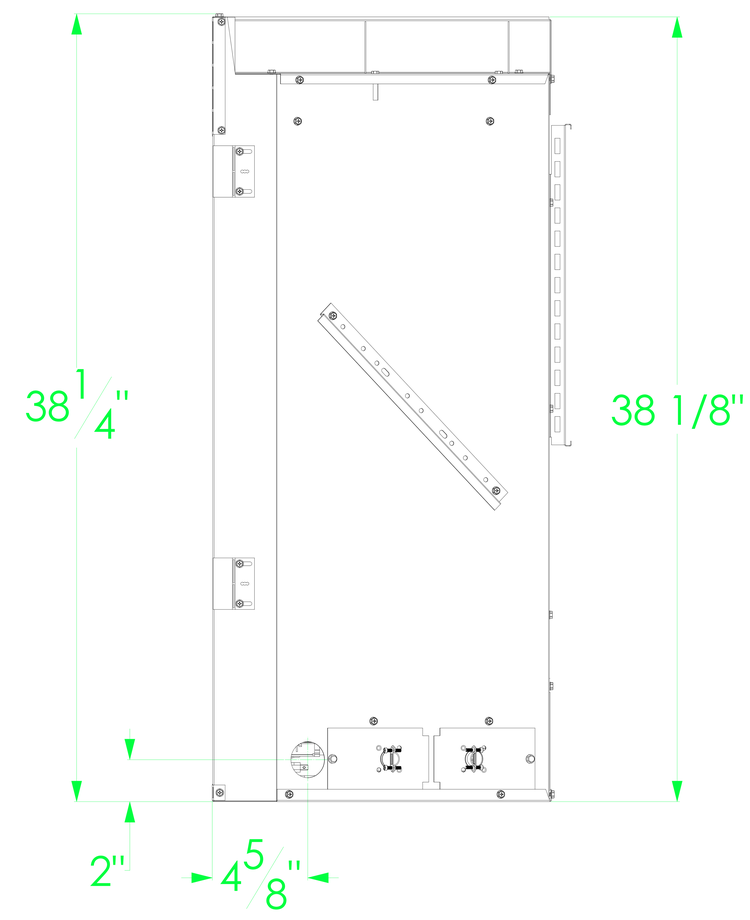
DVCC32BP32(N,P)-2
DVCC32BP72(N,P)-2