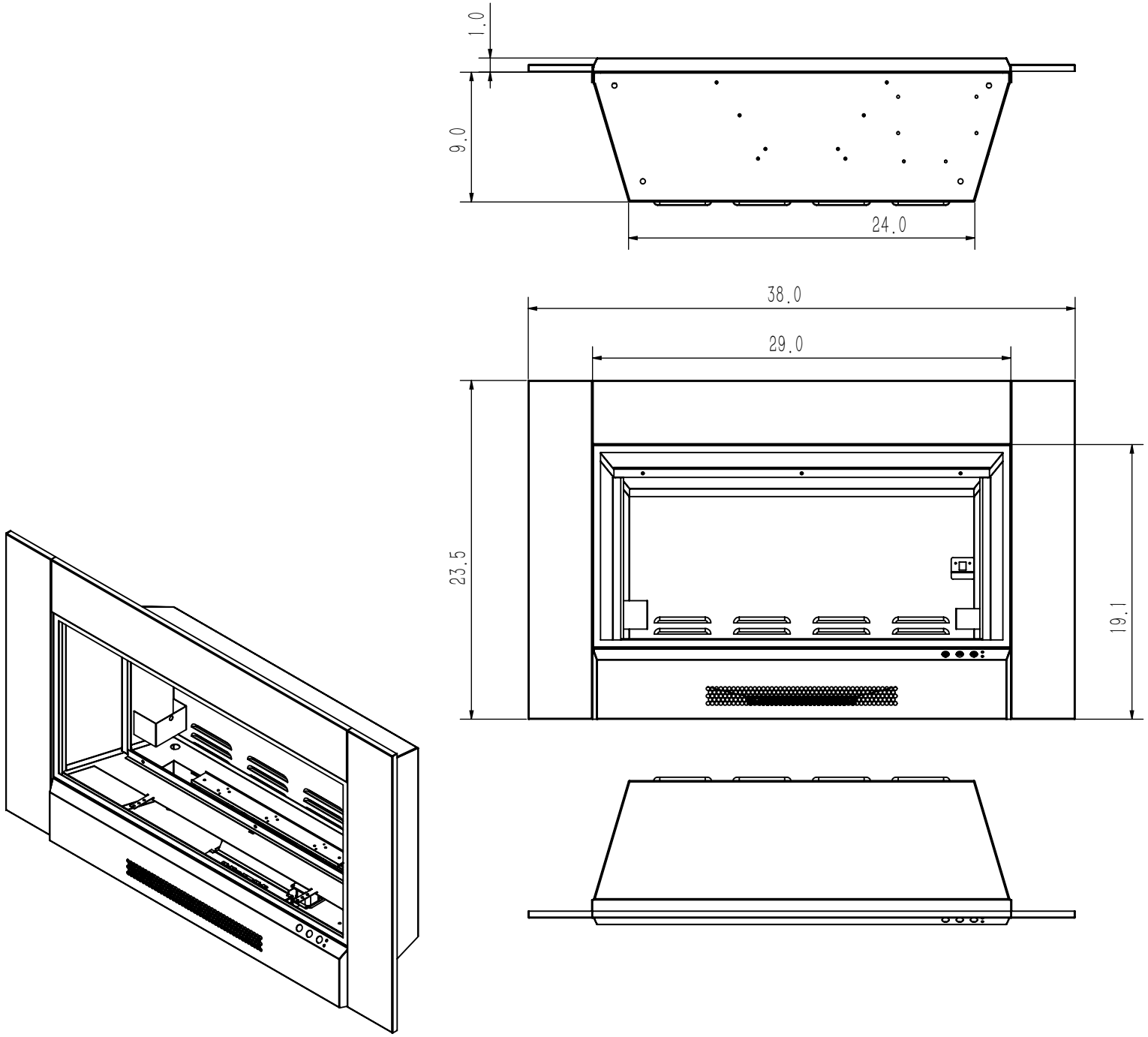
1.0
9.0
24.0
38.0
29.0
23.5
19.1

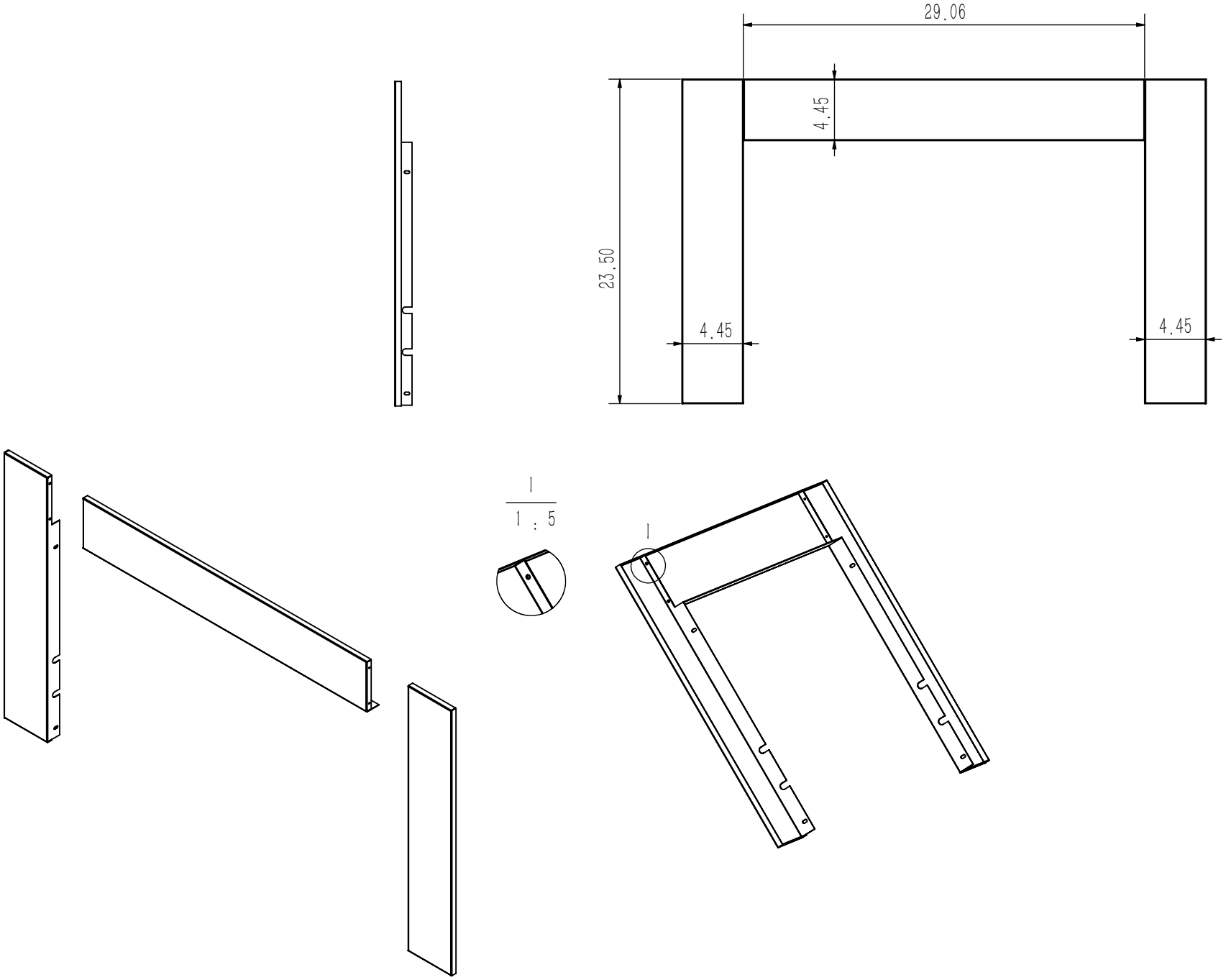
29.06
4.45
23.50
4.45
4.45
I
1 : 5
I